SPEAKER STAND

LK ELECTRONICS

www.lksound.com





Metal

Die Cast



SS001

Material: Aluminum
Height: 1300–2000mm
Tube: O.D.35–38mm
Load Capacity: 60kg
Base dimension: 1200mm
Inner box: 140x130x1060mm
Shipping Package:
300x280x1080mm (4pcs)



SS001

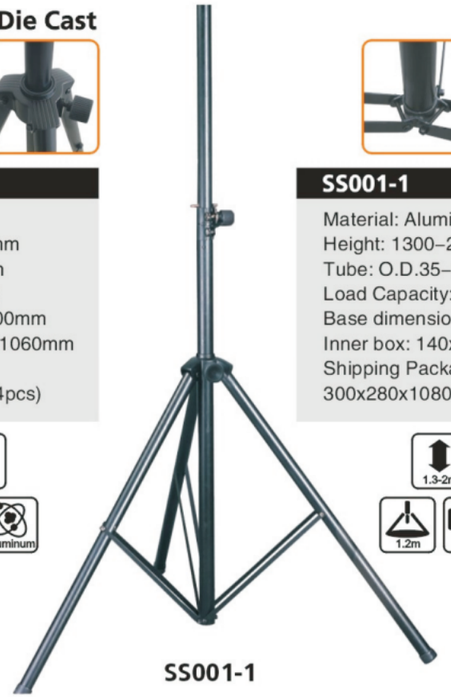

Die Cast



SS001-1

Material: Aluminum
Height: 1300–2000mm
Tube: O.D.35–38mm
Load Capacity: 60kg
Base dimension: 1200mm
Inner box: 140x130x1060mm
Shipping Package:
300x280x1080mm (4pcs)

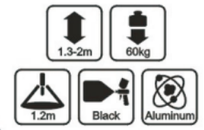

SS001-1



Metal Nylon



SS002

Material: Aluminum
Height: 1300–2050mm
Tube: O.D.38–41mm
Load Capacity: 60kg
Base dimension: 1500mm
Inner box: 140x130x1110mm
Shipping Package:
300x280x1130mm (4pcs)



SS002



Metal Die Cast



SS002B

Material: Aluminum
Height: 1300–2050mm
Tube: O.D.38–41mm
Load Capacity: 60kg
Base dimension: 1500mm
Inner box: 140x130x1110mm
Shipping Package:
300x280x1130mm (4pcs)

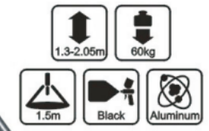

SS002B



SS003

Metal Die Cast



SS003

Material: Steel
Height: 1300–2000mm
Tube: O.D.35–38mm
Load Capacity: 60kg
Base dimension: 1200mm
Inner box: 140x130x1050mm
Shipping Package:
300x280x1070mm (4pcs)





SS004

Metal Die Cast



SS004

Material: Steel
Height: 1300–2050mm
Tube: O.D.38–41mm
Load Capacity: 60kg
Base dimension: 1500mm
Inner box: 140x130x1110mm
Shipping Package:
300x280x1130mm (4pcs)





SS005

Nylon Nylon



SS005

Material: Aluminum
Height: 1300–2000mm
Tube: O.D.35–38mm
Load Capacity: 60kg
Base dimension: 1200mm
Inner box: 140x130x1050mm
Shipping Package:
300x280x1070mm (4pcs)





SS005-1

Nylon Nylon



SS005-1

Material: Steel
Height: 1250–1800mm
Tube: O.D.35–38mm
Load Capacity: 60kg
Base dimension: 1200mm
Inner box: 140x130x980mm
Shipping Package:
300x280x1000mm (4pcs)





SS006

Nylon Nylon



SS006

Material: Aluminum
Height: 1300–2050mm
Tube: O.D.38–41mm
Load Capacity: 60kg
Base dimension: 1500mm
Inner box: 140x130x1320mm
Shipping Package:
300x280x1340mm (4pcs)





SS007

Nylon Nylon



SS007

Material: Aluminum
Height: 1300–2000mm
Tube: O.D.35–38mm
Load Capacity: 60kg
Base dimension: 1300mm
Inner box: 140x120x1050mm
Shipping Package:
380x260x1070mm (6pcs)





SS008

Nylon Nylon



SS008

Material: Aluminum
Height: 1500–2300mm
Tube: O.D.38–41mm
Load Capacity: 60kg
Base dimension: 1800mm
Inner box: 140x130x1320mm
Shipping Package:
300x280x1340mm (4pcs)





SS009

Nylon Nylon



SS009

Material: Aluminum
Height: 1400–2000mm
Tube: O.D.25–30mm
Load Capacity: 30kg
Base dimension: 1200mm
Inner box: 100x100x1180mm
Shipping Package:
320x220x1200mm (6pcs)





SS010

Nylon Nylon



SS010

Material: Aluminum
Height: 1300–2000mm
Tube: O.D.35–41mm
Load Capacity: 60kg
Base dimension: 1200mm
Inner box: 120x120x1050mm
Shipping Package:
380x260x1070mm (6pcs)





SS010-1

Nylon Nylon



SS010-1

Material: Steel
Height: 1250–1800mm
Tube: O.D.35–38mm
Load Capacity: 60kg
Base dimension: 1200mm
Inner box: 120x120x970mm
Shipping Package:
380x260x980mm (6pcs)



Air Pressure

Nylon



SS013

Die Cast



SS013

Material: Aluminum
Height: 1400–2200mm
Tube: O.D.35–38mm
Load Capacity: 60kg
Base dimension: 1500mm
Inner box: 140x130x1180mm
Shipping Package:
300x280x1200mm (4pcs)



Air Pressure



SS019

Nylon Nylon



SS019

Material: Aluminum
Height: 1400–2200mm
Tube: O.D.35–38mm
Load Capacity: 60kg
Base dimension: 1500mm
Inner box: 140x130x1180mm
Shipping Package:
300x280x1200mm (4pcs)



Die Cast



SS020

Die Cast



SS020

Material: Steel
Height: 1300–2000mm
Tube: O.D.35–38mm
Load Capacity: 60kg
Base dimension: 1200mm
Inner box: 140x130x1050mm
Shipping Package:
300x280x1070mm (4pcs)



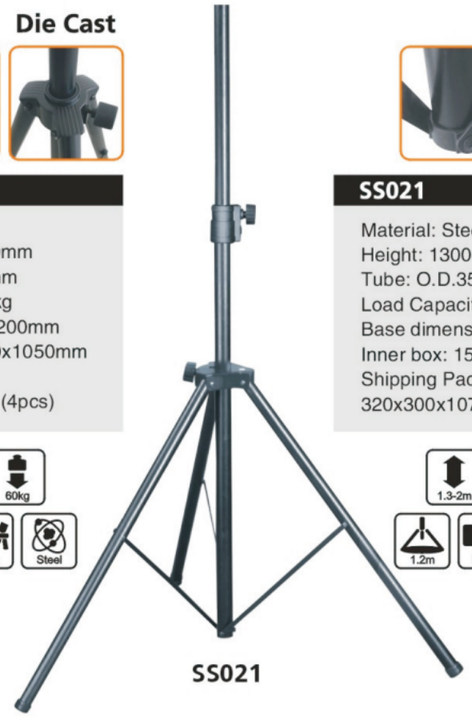

SS021

Die Cast



SS021

Material: Steel
Height: 1300–2000mm
Tube: O.D.35–42mm
Load Capacity: 60kg
Base dimension: 1200mm
Inner box: 150x140x1050mm
Shipping Package:
320x300x1070mm (4pcs)



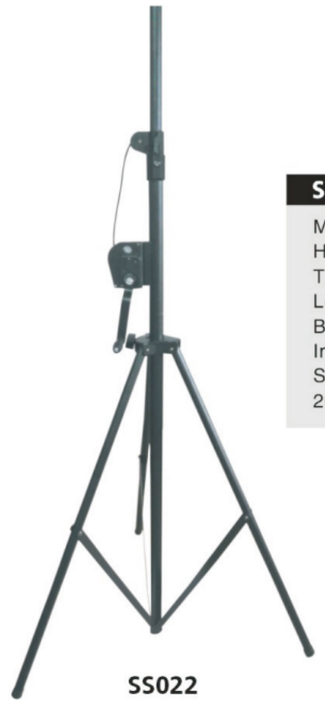

SS022

Die Cast



SS022

Material: Steel
Height: 1400–2200mm
Tube: O.D.35–42mm
Load Capacity: 60kg
Base dimension: 1200mm
Inner box: 190x160x1220mm
Shipping Package:
205x175x1240mm (1pcs)





SS023

Die Cast



SS023

Material: Steel
Height: 1400–2200mm
Tube: O.D.35–42mm
Load Capacity: 60kg
Base dimension:1200mm
Inner box: 190x160x1220mm
Shipping Package:
205x175x1240mm (1pcs)





SS026



SS026

Material: Steel
Height: 1300–2000mm
Tube: O.D.35–38mm
Load Capacity: 60kg
Base dimention: 1200mm
Inner box: 140x130x1050mm
Shipping Package:
300x280x1070mm (4pcs)





SS048

SS048

Material: Aluminum, Steel
Height: 1300–2000mm
Tube: O.D.35–38mm
Load Capacity: 60kg
Base dimention: 1200mm
Inner box: 140x130x1090mm
Shipping Package:
300x280x1110mm (4pcs)

SS044

SS044

Material: Aluminum, Steel
Height: 1050–1850mm
Extension tube: Φ35x0.8mm, Height: 1000mm
Main tube: Φ38x0.8mm, Height: 910mm
Tripod base dimension: 1300mm
Load Capacity: 50kg
Inner box: 140x130x1090mm
Shipping Package: 410x300x1110mm (6pcs)







SS070

SS070

Material: Aluminum, Steel
Height: 1240–2158mm
Extension tube: Φ35mm, Aluminum
Main tube: Φ41mm, Steel
Leg tube: Φ35mm, Steel
Load Capacity: 50kg
Inner box: 180x145x1195mm
Shipping Package:
310x200x1225mm (2pcs)



SS069

From 35mm to M10 female
Height: 100mm
Weight: 0.55kg
Material: Steel
Inner box: 90x50x125mm
Shipping Package:
290x280x290mm (30pcs)



SS042

SS042

Material: Aluminum, Steel
Height: 1265–2050mm
Extension tube: Φ35mm
Main tube: Φ41mm
Tripod base dimension: 1400mm
Load Capacity: 50kg
Inner box: 180x130x1150mm
Shipping Package:
280x200x1180mm (2pcs)



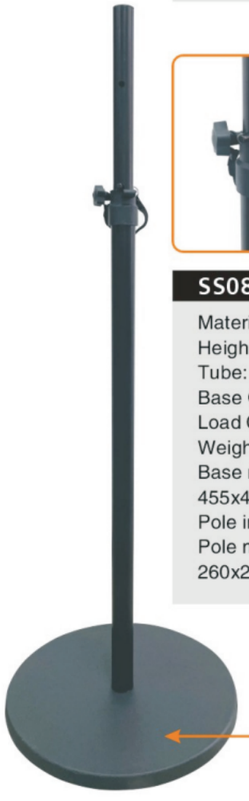

SS080

Material: Steel
Height: 1050–1810mm
Tube: O.D.35–41mm
Base O.D.: Φ440mm
Load Capacity: 20kg
Weight: 12.5kg
Base master carton:
455x45x455mm(1pcs)
Pole inner box: 90x80x1040mm
Pole master carton:
260x200x1070mm (6pcs)

Stable steel stand with large,flat and round cast–iron base Φ440mm

Weight:10kg



SS046

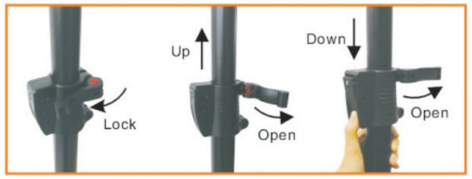

SS046

Material: Aluminum, Steel
Height: 1050–1850mm
Extension tube: Φ35x0.8mm, Height: 1000mm
Main tube: Φ38x0.8mm, Height: 910mm
Tripod base dimension: 1300mm
Load Capacity: 50kg
Inner box: 130x120x1090mm
Shipping Package: 380x280x1110mm (6pcs)



SS049

SS049

Material: Aluminum, Steel
Height: 1300–2000mm
Tube: O.D.35–38mm
Load Capacity: 60kg
Base dimension: 1200mm
Inner box: 140x130x1090mm
Shipping Package:
300x280x1110mm (4pcs)



Air Pressure



SS061

SS061

Material: Aluminum, Steel
Height: 1170–2000mm
Tube: O.D.35–38mm
Load Capacity: 50kg
Base dimension: 1350mm
Inner box: 120x120x1080mm
Shipping Package:
260x260x1110mm (4pcs)

Air Pressure



SS064

SS064

Material: Aluminum, Steel
Height: 1170–2000mm
Tube: O.D.35–38mm
Load Capacity: 50kg
Base dimension: 1350mm
Inner box: 140x130x1070mm
Shipping Package:
300x280x1090mm (4pcs)



SS082



SS082

Height: 1208–1906mm
Tube: O.D.35–41mm
Load Capacity: 50kg
Material: Steel
Weight: 7kg
Inner box: 160x140x1045mm
Shipping Package:
300x180x1075mm (2pcs)





SS086

SS086

Height: 910–1230mm
Tube: O.D.25–30 / 25–35mm
Load Capacity: 25kg
Material: Steel
Weight: 1.4kg
Inner box: 110x100x460mm
Shipping Package:
530x240x480mm (10pcs)



SS087

SS087

Material: Steel
Height: 1194–1833mm
Tube: O.D.35–38mm
Load Capacity: 50kg
Weight: 3kg
Base dimension: 1200mm
Inner box: 140x130x970mm
Shipping Package:
300x280x990mm (4pcs)

SS087-2

Material: Steel
Height: 1194–1833mm
Tube: O.D.35–38mm
Load Capacity: 50kg
Weight: 3.4kg
Base dimension: 1200mm
Inner box: 140x130x950mm
Shipping Package:
300x280x970mm (4pcs)



SS087-2

SS088

Height: 855–1255mm
Tube: O.D.35–38mm
Load Capacity: 30kg
Material: Steel
Weight: 1.54kg
Inner box: 120x120x620mm
Shipping Package:
630x260x640mm (10pcs)



SS088

New

SS092

Material: Steel
Height: 650–1350mm
Tube: O.D.41–38–35
Load Capacity: 20kg
Base Dimension: 703mm
Weight: 2.08kg
Inner box: 120x120x630mm
Shipping Package:
380x260x650mm (6pcs)



SS092



SS014 SS024 SS050 SS051 SS056

SS014	SS024	SS050	SS051	SS056
Material: Steel Height: 800–1360mm Tube: O.D.35–38mm Load Capacity: 30kg Inner box: 80x80x805mm Shipping Package: 430x180x820mm (10pcs)	Material: Steel Height: 800–1360mm Tube: O.D.35–38mm Load Capacity: 30kg Inner box: 80x80x840mm Shipping Package: 430x180x860mm (10pcs)	Material: Aluminum Height: 805–1253mm Tube: O.D.35–38mm Load Capacity: 30kg Inner box: 125x70x815mm Shipping Package: 380x270x835mm (10pcs)	Material: Aluminum Height: 805–1263mm Tube: O.D.35–38mm Load Capacity: 30kg Inner box: 110x70x815mm Shipping Package: 380x240x835mm (10pcs)	Material: Aluminum+Steel Height: 825–1209mm Tube: O.D.35–41mm Load Capacity: 30kg Inner box: 175x65x855mm Shipping Package: 370x215x875 (6pcs)



SS043 SS045 SS057



SS043

Material: Aluminum
Height：1085–1845mm
Extension tube: Φ35mm
Main tube: Φ38mm
Load Capacity：30kg
Inner box: 125x70x1095mm
Shipping Package:
380x270x1115mm (10pcs)

SS045

Material: Aluminum
Height：1085–1845mm
Extension tube: Φ35mm
Main tube: Φ38mm
Load Capacity：30kg
Inner box: 110x70x1095mm
Shipping Package:
380x240x1115mm (10pcs)

SS057

Material: Aluminum, Steel
Height：1135–1808mm
Extension tube: Φ35mm
Main tube: Φ41mm
Load Capacity：30kg
Inner box: 175x65x1170mm
Shipping Package:
370x355x1190mm (10pcs)



SS047



SS047

Material: Steel
Base size：480x480x27mm
Nut hole O.D.: M20*2.5mm
Heavy Weight: 8.4kg
Inner box: 490x35x490mm
Shipping Package:
510x90x510mm (2pcs)

Air Pressure Air Pressure Air Pressure



SS059



SS062



SS066





SS059

Material: Steel
Height: 847–1327mm
Tube: O.D.35–38mm
Load Capacity: 40kg
Inner box: 100x90x885mm
Shipping Package:
290x220x905mm (6pcs)

SS062

Material: Steel
Height: 832–1312mm
Tube: O.D.35–38mm
Load Capacity: 40kg
Inner box: 100x90x840mm
Shipping Package:
290x220x860mm (6pcs)

SS066

Material: Steel
Height: 1080–1770mm
Tube: O.D.35–38mm
Load Capacity: 40kg
Inner box: 100x90x1100mm
Shipping Package:
290x220x1120mm (6pcs)



SS047L







SS047L

Material: Steel
Base size：565x565x40mm
Nut hole O.D.: M20*2.5mm
Heavy Weight: 13kg
Inner box: 580x50x580mm
Shipping Package:
600x120x600mm (2pcs)

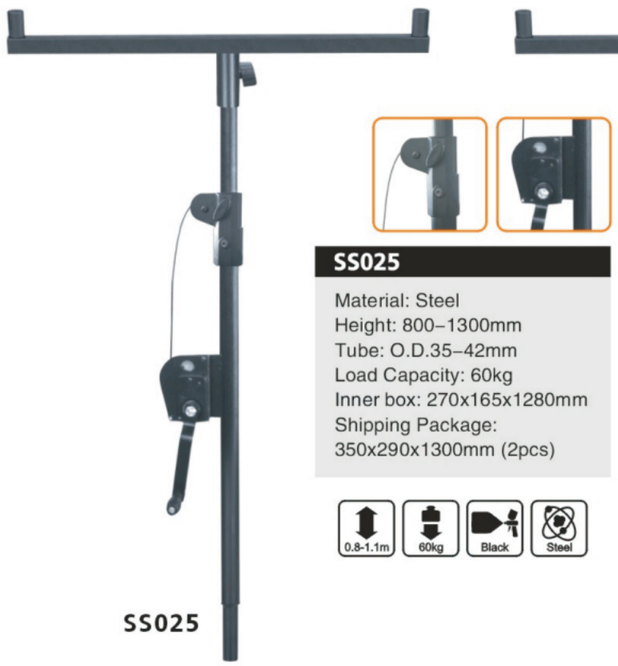

SS025

Material: Steel
Height: 800–1300mm
Tube: O.D.35–42mm
Load Capacity: 60kg
Inner box: 270x165x1280mm
Shipping Package:
350x290x1300mm (2pcs)





SS054

Material: Aluminum, Steel
Height: 800–1300mm
Tube: O.D.35–42mm
Load Capacity: 60kg
Inner box: 270x120x1220mm
Shipping Package:
630x290x1240mm (5pcs)





SS015

Material: Steel
Height: 800–1300mm
Tube: O.D.35–38mm
Load Capacity: 50kg
Base dimension: 350mm
Shipping Package:
690x670x230mm (6pcs)





SS052

Material: Aluminum, Steel
Height: 800–1300mm
Tube: O.D.35–38mm
Load Capacity: 50kg
Base dimension: 350mm
Shipping Package:
740x670x230mm (6pcs)







SS053

Material: Aluminum, Steel
Height: 800–1300mm
Tube: O.D.35–38mm
Load Capacity: 50kg
Base dimension: 350mm
Shipping Package:
740x670x230mm (6pcs)





SS036

Material:Steel
Height: 325–510mm
Tube: O.D.35–38mm
Roof: 230x230mm
Floor: 300x300mm
Inner box: 305x75x310mm
Shipping Package:
405x320x330mm (5pcs)



SS055

Material:Steel
Height: 722–1412mm
Underspread dimension: 579x488mm
Load Capacity: 18kg
Inner box: 230x145x740mm
Shipping Package:
310x245x760mm (2pairs)





SS055



SS039



SS040

SS039	SS040
Base size: 215x202mm Top size: 220x180mm Height: 300–375mm Inner box: 255x215x275mm Shipping Package: 665x275x295mm (3pairs)	Thickness max: 50mm Top size: 220x180mm Height: 300–375mm Inner box: 255x215x275mm Shipping Package: 665x275x295mm (3pairs)



SS072

Material: Steel
Height: 760–1255mm
Top size: 220x180mm
Base size: 430x403mm
Load Capacity:35kg
Weight: 7.2kg
Inner box: 755x440x105mm
Shipping Package:
460x125x775mm (1pair)



SS074





SS075

SS074

Material: Steel
Height: 300–375mm
Top size: 220x180mm
Base size: 260x240mm
Inner box: 275x110x340mm
Shipping Package:
360x295x370mm (3pairs)

SS075

Material: Steel
Table thickness max:50mm
Height: 300–375mm
Top size: 220x180mm
Inner box: 210x155x320mm
Shipping Package:
495x230x350mm (3pairs)





SS076

Material: Steel
Height: 760–1255mm
Top size: 220x180mm
Base size: 348x348mm
Load Capacity: 35kg
Weight: 7.6kg
Inner box: 425x105x755mm
Shipping Package:
445x125x785mm (1pair)

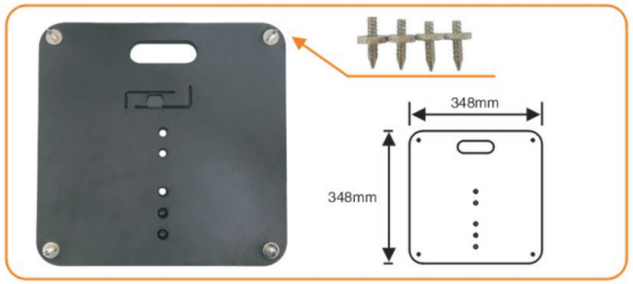



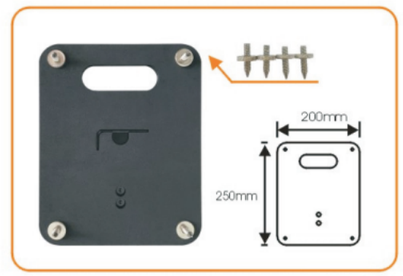



SS077

Material: Steel
Height: 294–369mm
Top size: 250x200mm
Base size: 250x200mm
Inner box: 210x155x300mm
Shipping Package:
490x230x320mm (3pairs)

SS078

Material: Steel
Table thickness max:50mm
Height: 294–369mm
Top size: 250x200mm
Inner box: 210x135x300mm
Shipping Package:
430x230x320mm (3pairs)



SS084

SS084

Base size: 165x200mm
Top size: 220x250mm
Height: 480mm
Weight: 4.2kg
Inner box: 230x80x490mm
Shipping Package:
250x180x510mm (1pairs)







SS091

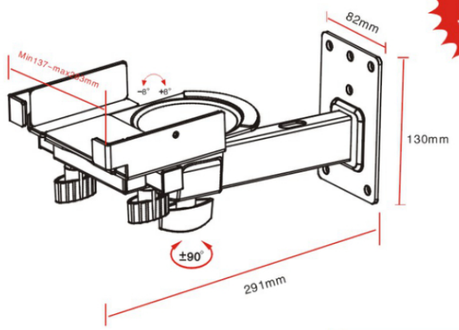

New

SS091

Material: Steel
Load Capacity: 10kg
Weight: 1.6kg
Inner box:305x175x140mm
Shipping Package:
325x195x460mm (3 pairs)





SS016



SS017



SS018



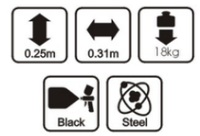

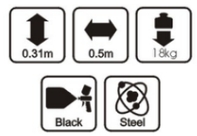

SS016

Material: Steel
Height: 250mm
Depth: 310mm
Load Capacity: 18kg
Inner box: 260x70x420mm
Shipping Package:
300x280x440mm (4pcs)

SS017

Material: Steel
Height: 250mm
Depth: 310mm
Load Capacity: 18kg
Inner box: 260x80x420mm
Shipping Package:
345x280x440mm (4pcs)

SS018

Material: Steel
Height: 310mm
Depth: 500mm
Load Capacity: 18kg
Inner box: 330x70x560mm
Shipping Package:
380x350x580mm (5pcs)



SS028



SS033



SS034





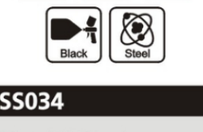

SS028

Material: Steel
Height: 250mm
Depth: 350–500mm
Load Capacity: 18kg
Inner box: 260x70x430mm
Shipping Package:
450x280x450mm (6pcs)

SS033

Material: Steel
Height: 490mm
Depth: 300–400mm
Load Capacity: 18kg
Inner box: 150x110x610mm
Shipping Package:
350x320x630mm (6pcs)

SS034

Material: Steel
Height: 250mm
Depth: 350–450mm
Load Capacity: 18kg
Inner box: 260x65x405mm
Shipping Package:
425x280x425mm (6pcs)

PROFESSIONAL SPEAKER STAND



SS034-1

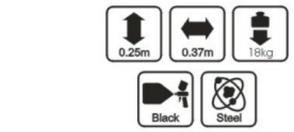



SS035





SS079

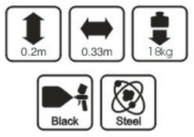

SS034-1	SS035	SS079
Material: Steel Height: 250mm Depth: 350–450mm Load Capacity: 18kg Inner box: 260x70x430mm Shipping Package: 455x280x450mm (6pcs)	Material: Steel Height: 250mm Depth: 400–580mm Load Capacity: 18kg Inner box: 260x135x425mm Shipping Package: 570x280x450mm (4pcs)	Material: Steel Height: 200mm Depth: 330mm Load Capacity: 18kg Inner box: 210x90x340mm Shipping Package: 440x290x360mm (6pcs)



SS067



SS081



SS085



SS067	SS081	SS085
Material: Steel Width:100mm Depth: 60mm Height: 70mm Weight: 0.4kg Inner box: 80x65x110mm Shipping Package: 355x180x255mm (20pcs)	Material: Steel Weight: 1.82kg Inner box: 240x160x45mm Shipping Package: 295x260x180mm (6pcs)	Material: Steel Height: 220mm Depth: 262mm Load Capacity: 18kg Inner box: 230x110x275mm Shipping Package: 480x350x295mm (6pcs)



SSPACK002



SSPACK003

SSPACK002	SSPACK003
Stand: 2xSS005 Bag: B005 Inner box: 280x140x1060mm Shipping Package: 300x300x1080mm (2set)	Stand: 2xSS010 Bag: B005 Inner box: 260x130x1060mm Shipping Package: 280x280x1080mm (2set)



B001



B002



B003



B004



B005



B006
Dimensions: 330×330×1050 mm



B007
Dimensions: 1080×250×145 mm

MICROPHONE STAND

LK ELECTRONICS

www.lksound.com





MS-1



MS017
- Microphone stand with fixed boom
- Nylon joint and tripod nylon base



Microphone1
- Dynamic capsule
- Cardioid polar pattern
- Sliding silent on/ off switch for use
- when there is no sound engineer



MS045
- Special rubber microphone holder with 5/8″ universal adapter



- Cable: **XX-002**
- Inner box: 130x110x910mm
  Shipping Package:
  350x280x930mm (6pcs)



MS-2



MS006
- New design die cast aluminium tripod mic stand
- Clutch–style height adjustement
- Telescopic adjustable boom arm
- Anti–skid natural footcap



Microphone2
- Dynamic capsule
- Cardioid polar pattern
- High applicable SPL for low distortion in close–miking stage applications
- Flat and extended frequency response



MS044
- Special rubber microphone holder with 5/8″ universal adapter



- Cable: **XX-002**
- Inner box: 130x110x930mm
  Shipping Package:
  350x280x950mm (6pcs)

PROFESSIONAL **MICROPHONE** STAND









Nylon



Die Cast



Die Cast

MS084

Height: 1050–1620mm
Arm Length: 750mm
Base: Die–cast
Inner box: 100x100x910mm
Shipping Package:
320x220x930mm (6pcs)

MS001

Height: 1000–1650mm
Arm Length: 750mm
Base: Die–cast
Inner box: 100x100x900mm
Shipping Package:
320x220x920mm (6pcs)

MS002

Height: 1000–1650mm
Arm Length: 580–910mm
Base: Die–cast
Inner box: 100x100x950mm
Shipping Package:
320x220x970mm (6pcs)



MS003

Height: 560–800mm
Arm Length: 580–910mm
Base: Die–cast
Inner box: 100x100x690mm
Shipping Package:
320x220x710mm (6pcs)



MS004

Height: 560–800mm
Arm Length: 750mm
Base: Die–cast
Inner box: 100x100x760mm
Shipping Package:
320x220x780mm (6pcs)



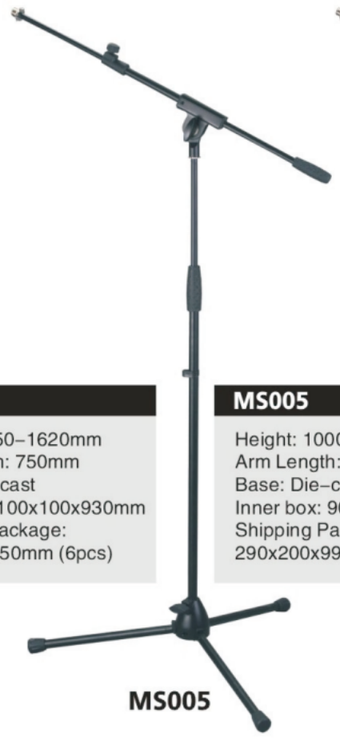





Nylon



Metal

MS087

Height: 1050–1620mm
Arm Length: 750mm
Base: Die–cast
Inner box: 100x100x930mm
Shipping Package:
320x220x950mm (6pcs)

MS005

Height: 1000–1650mm
Arm Length: 580–910mm
Base: Die–cast
Inner box: 90x90x970mm
Shipping Package:
290x200x990mm (6pcs)

MS006

Height: 1000–1650mm
Arm Length: 750mm
Base: Die–cast
Inner box: 90x90x920mm
Shipping Package:
290x200x940mm (6pcs)











Die Cast

MS007

Height: 560–800mm
Arm Length: 580–910mm
Base: Die–cast
Inner box: 100x100x700mm
Shipping Package:
320x220x720mm (6pcs)

MS008

Height: 560–800mm
Arm Length: 750mm
Base: Die–cast
Inner box: 100x100x750mm
Shipping Package:
320x210x770mm (6pcs)

MS009

Height: 540mm
Arm Length: 750mm
Base: Die–cast
Inner box: 100x100x750mm
Shipping Package:
320x220x770mm (6pcs)

MS010

Height: 540mm
Arm Length: 580–910mm
Base: Die–cast
Inner box: 100x100x600mm
Shipping Package:
320x220x620mm (6pcs)

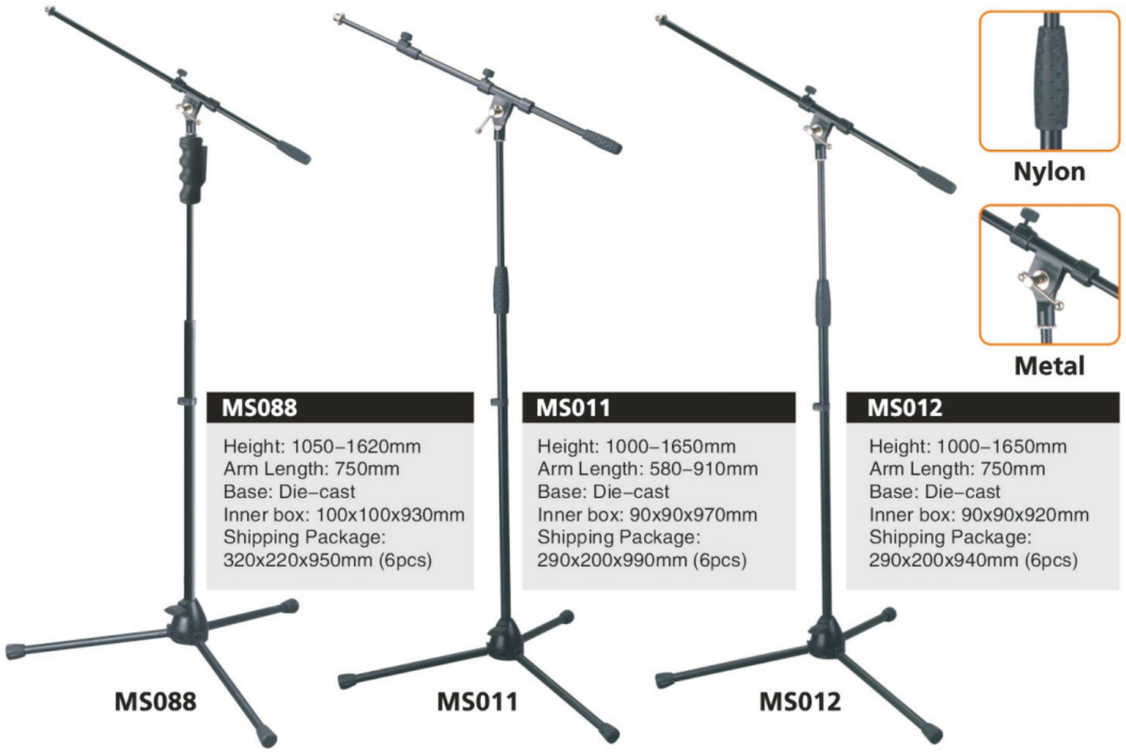

MS088

Height: 1050–1620mm
Arm Length: 750mm
Base: Die–cast
Inner box: 100x100x930mm
Shipping Package:
320x220x950mm (6pcs)

MS011

Height: 1000–1650mm
Arm Length: 580–910mm
Base: Die–cast
Inner box: 90x90x970mm
Shipping Package:
290x200x990mm (6pcs)

MS012

Height: 1000–1650mm
Arm Length: 750mm
Base: Die–cast
Inner box: 90x90x920mm
Shipping Package:
290x200x940mm (6pcs)



MS013	MS014	MS015	MS016
Height: 560–800mm Arm Length: 750mm Base: Die–cast Inner box: 100x100x750mm Shipping Package: 320x220x770mm (6pcs)	Height: 560–800mm Arm Length: 580–910mm Base: Die–cast Inner box: 100x100x715mm Shipping Package: 320x220x740mm (6pcs)	Height: 540mm Arm Length: 580–910mm Base: Die–cast Inner box: 100x100x630mm Shipping Package: 320x220x650mm (6pcs)	Height: 540mm Arm Length: 750mm Base: Die–cast Inner box: 100x100x750mm Shipping Package: 320x220x770mm (6pcs)

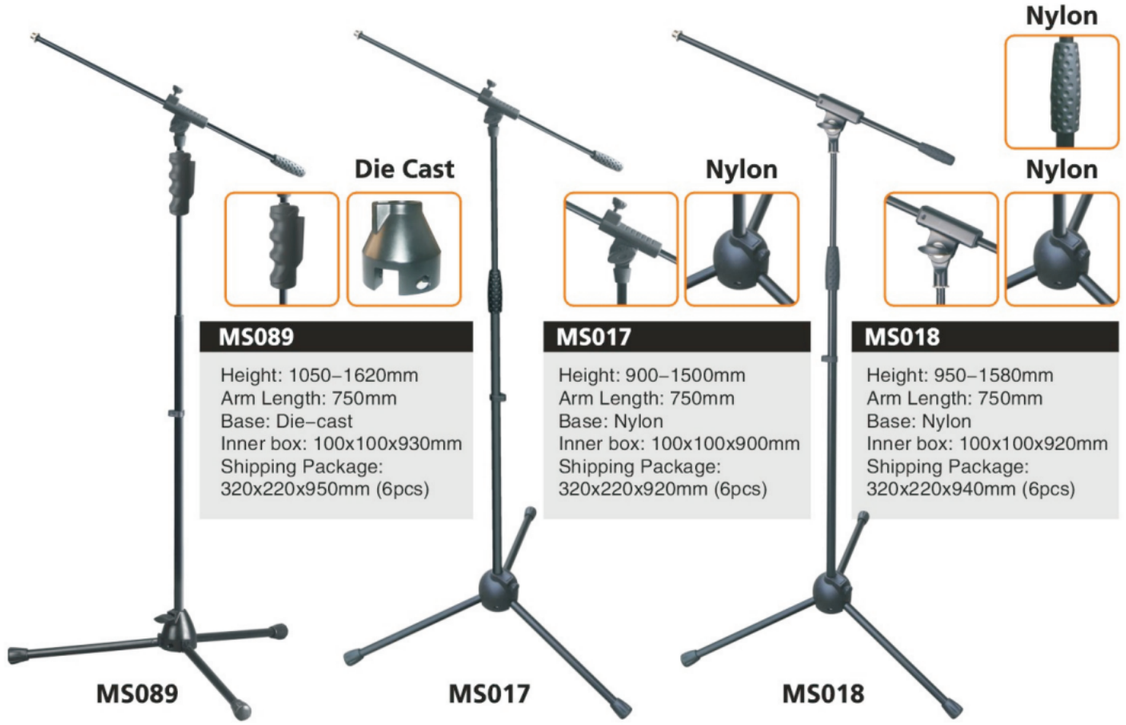

MS089

Height: 1050–1620mm
Arm Length: 750mm
Base: Die–cast
Inner box: 100x100x930mm
Shipping Package:
320x220x950mm (6pcs)

MS017

Height: 900–1500mm
Arm Length: 750mm
Base: Nylon
Inner box: 100x100x900mm
Shipping Package:
320x220x920mm (6pcs)

MS018

Height: 950–1580mm
Arm Length: 750mm
Base: Nylon
Inner box: 100x100x920mm
Shipping Package:
320x220x940mm (6pcs)

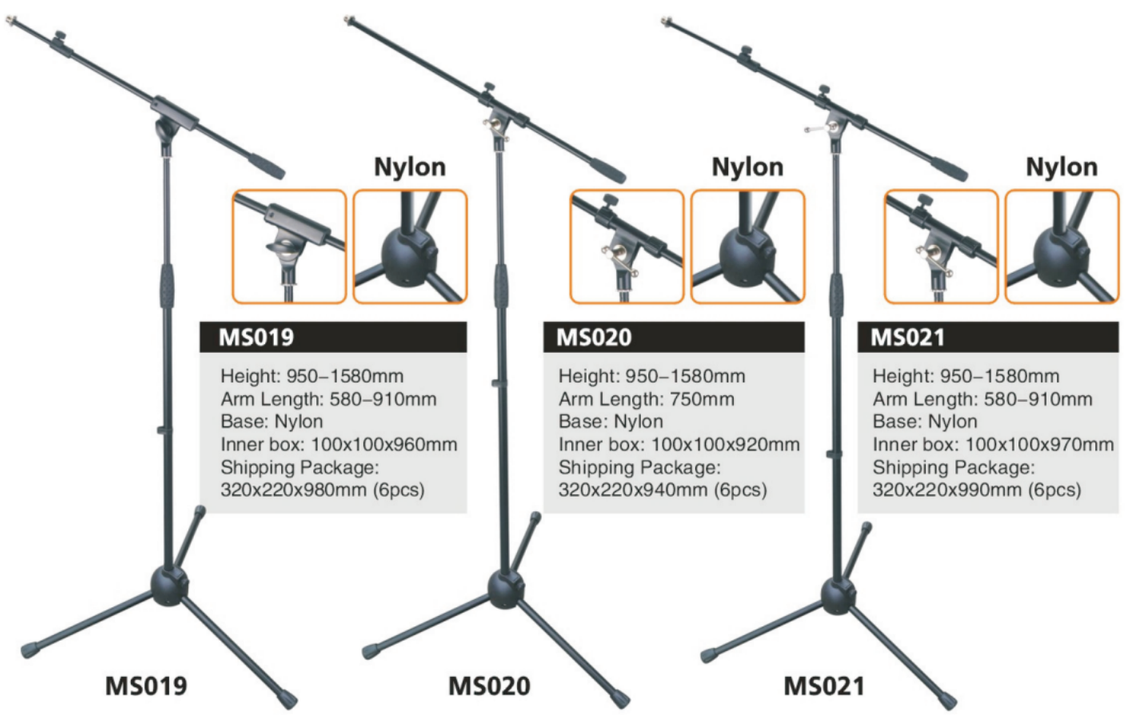

MS019

Height: 950–1580mm
Arm Length: 580–910mm
Base: Nylon
Inner box: 100x100x960mm
Shipping Package:
320x220x980mm (6pcs)

MS020

Height: 950–1580mm
Arm Length: 750mm
Base: Nylon
Inner box: 100x100x920mm
Shipping Package:
320x220x940mm (6pcs)

MS021

Height: 950–1580mm
Arm Length: 580–910mm
Base: Nylon
Inner box: 100x100x970mm
Shipping Package:
320x220x990mm (6pcs)







MS083

Height: 1050–1620mm
Arm Length: 750mm
Base: Nylon
Inner box: 110x110x920mm
Shipping Package:
350x240x940mm (6pcs)

MS090

Height: 890–1500mm
Base: Steel
Inner box: 100x95x805mm
Shipping Package:
310x220x830mm (6pcs)



MS080-1

Height: 950–1580mm
Arm Length: 800mm
Base: Steel
Inner box: 100x100x890mm
Shipping Package:
320x220x910mm (6pcs)





MS081-1

Height: 900–1500mm
Arm Length: 800mm
Base: Nylon
Inner box: 100x100x900mm
Shipping Package:
320x220x920mm (6pcs)



MS082-1

Height: 960–1580mm
Arm Length: 800mm
Base: Die–cast
Inner box: 90x90x900mm
Shipping Package:
290x200x920mm (6pcs)



MS022

Height: 440mm
Arm Length: 525mm
Base Size: Φ180mm
Base Materials: Iron Cast
Shipping Package:
480x420x200mm (6pcs)



MS023

Height: 440mm
Arm Length: 525mm
Base Size: Φ180mm
Base Materials: Iron Cast
Shipping Package:
480x420x200mm (6pcs)



MS024

Height: 300–440mm
Base Size: 190x170mm
Base Materials: Iron Cast
Inner box: 130x70x310mm
Shipping Package:
280x230x330mm (6pcs)





MS072

Height: 400–570mm
Base Size: 190x190x50mm
Base Materials: Iron Cast
Inner box: 190x75x400mm
Shipping Package:
400x245x420mm (6pcs)



MS105

Height: 210–340mm
Base Size: Φ130mm
Base Materials: Iron Cast
Inner box: 135x60x210mm
Shipping Package:
330x290x450mm (20pcs)



MS106

Height: 440mm
Arm Length: 525mm
Base Size: 155x120x20mm
Base Materials: Iron Cast
Inner box: 135x65x520mm
Shipping Package:
290x215x540mm (6pcs)



MS025

Height: 850–1470mm
Base Size: Φ250mm
Base Materials: Iron Cast
Shipping Package:
820x470x200mm (6pcs)



MS026

Height: 850–1470mm
Base Size: Φ250mm
Base Materials: Iron Cast
Shipping Package:
820x470x190mm (6pcs)







MS027

Height: 850–1470mm
Base Size: Φ250mm
Base Materials: Iron Cast
Shipping Package:
820x470x190mm (6pcs)





Lock

MS086

Height: 950–1500mm
Base Size: Φ250mm
Base Materials : Iron Cast
Shipping Package:
905x470x200mm (6pcs)

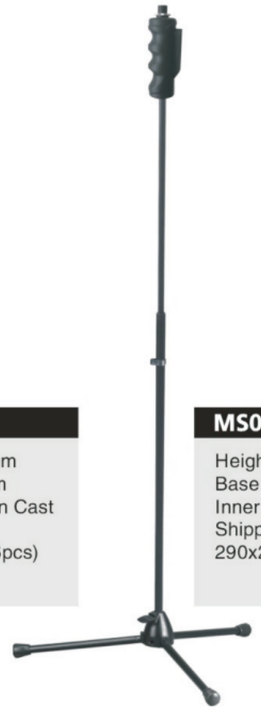

MS091

Height: 950–1515mm
Base Materials : Die–cast
Inner box: 90x90x810mm
Shipping Package:
290x200x830mm (6pcs)





MS096

Height: 900–1500mm
Arm Length: 750mm
Base Materials : Iron–cast
Inner box: 125x110x940mm
Shipping Package:
350x270x960mm (6pcs)



MS085

Height: 950–1500mm
Base Size: Φ250mm
Base Materials: Iron Cast
Shipping Package:
905x470x200mm (6pcs)

weight :3kg



MS092

Height: 1040–1540mm
Base Size: Φ305mm
Base Materials: Iron Cast
Inner box: 315x150x950mm
Shipping Package:
330x160x970mm (1pcs)



MS093

Height: 970–1560mm
Base Size: Φ260mm
Base Materials: Iron Cast
Shipping Package:
1005x470x140mm (4pcs)

weight :5kg





MS098

Height: 1040–1540mm
Base Materials: Iron Cast
Inner box: 150x150x1020mm
Shipping Package:
320x320x1040mm (4pcs)





Die Cast



Heavy Base plate

MS166

Height: 1000–1650mm
Arm Length: 580–910mm
Base: Die–cast
Weight: 2.74kg
Inner box: 100x100x950mm
Shipping Package:
320x220x970mm (6pcs)

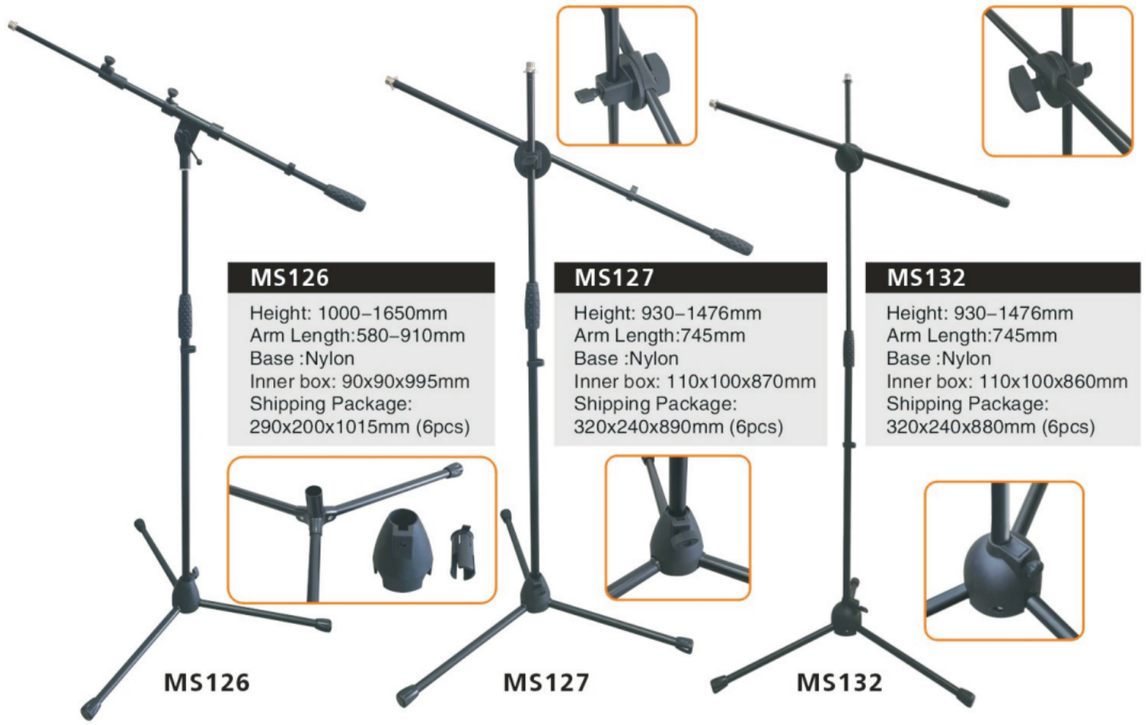

MS126

Height: 1000–1650mm
Arm Length:580–910mm
Base :Nylon
Inner box: 90x90x995mm
Shipping Package:
290x200x1015mm (6pcs)

MS127

Height: 930–1476mm
Arm Length:745mm
Base :Nylon
Inner box: 110x100x870mm
Shipping Package:
320x240x890mm (6pcs)

MS132

Height: 930–1476mm
Arm Length:745mm
Base :Nylon
Inner box: 110x100x860mm
Shipping Package:
320x240x880mm (6pcs)

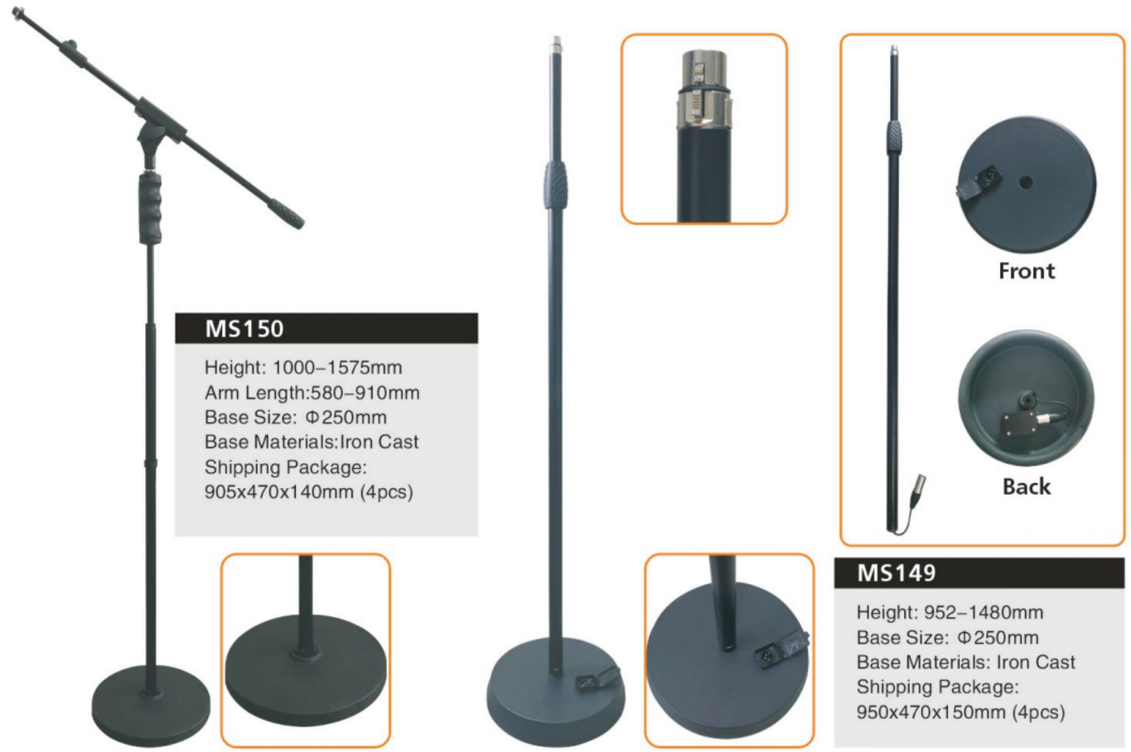

MS150

Height: 1000–1575mm
Arm Length:580–910mm
Base Size: Φ250mm
Base Materials:Iron Cast
Shipping Package:
905x470x140mm (4pcs)

MS149

Height: 952–1480mm
Base Size: Φ250mm
Base Materials: Iron Cast
Shipping Package:
950x470x150mm (4pcs)



MS028	MS029	MS079
Height: 1350–2320mm Arm Length: 1180–2200mm Base Materials: Nylon Inner box: 140x130x1530mm Shipping Package: 280x160x1550mm (2pcs)	Height: 1500–3500mm Arm Length: 1450–3250mm Base Materials: Die Cast Inner box: 140x130x1500mm Shipping Package: 280x160x1520mm (2pcs)	Base dimension: Φ1500mm weight: 5.2kg Minimum Height: 1600mm Maxmum Height: 2350mm Notes: Boom length: 1350~2050mm Inner box: 130x110x1610mm Shipping Package: 240x150x1630mm (2pcs)





MS152

Height: 260–360mm
Width:285mm
Material:Steel
Inner box: 75x55x295mm
Shipping Package:
330x305x315mm (20pcs)





MS153

Height: 199mm
Width:197mm
Material:Steel
Inner box: 75x55x220mm
Shipping Package:
330x305x240mm (20pcs)



MS154

Height: 210–310mm
Width:198mm
Depth: 176mm
Material:Steel
Inner box: 85x45x210mm
Shipping Package:
370x255x230mm (20pcs)



MS155

Height: 170mm
Inner box: 60x50x180mm
Shipping Package:
330x280x200mm (25pcs)



MS151

Height: 450–600mm
Material:Steel
Inner box: 90x40x270mm
Shipping Package:
230x200x290mm (10pcs)



MS157

Height: 520mm
Arm Length:530mm
Material:Steel
Inner box: 95x90x600mm
Shipping Package:
480x210x620mm (10pcs)







MS169

MS169-1

MS169-2

MS169	MS169-1	MS169-2
Height: 580–1157mm Material: Steel Load Capacity: 5kg Weight: 0.81kg Inner box: 80x70x440mm Shipping Package: 380x180x460mm (10pcs)	Height: 580–1157mm Material: Steel Load Capacity: 5kg Weight: 1.12kg Inner box: 80x70x440mm Shipping Package: 380x180x460mm (10pcs)	Height: 580–1250mm Arm Length: 731mm Material: Steel Load Capacity: 5kg Weight: 1.3kg Inner box: 85x85x610mm Shipping Package: 455x190x630mm (10pcs)

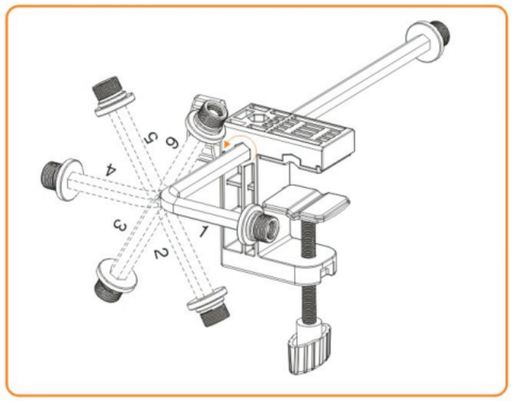







MS172

Rod: 304 x 84 mm, 2x 3/8"
Clamp: 94 x 74 x 35 mm
Clamping range: Plate 0–53 mm,
Tube ϕ 6–48 mm
Thread adapter: intern 3/8", extern 5/8"
Height：0–235，Length：0–176mm
Weight: 0.48kg
Inner box: 135x40x330mm
Shipping Package:
440x290x350mm (20pcs)



New

MS173

Height: 1000–1595mm
Arm Length: 580–910mm
Leg Length: 340mm
Material: Steel
Weight: 3.06kg
Inner box: 100x100x1020mm
Shipping Package:
320x220x1040mm (6pcs)









MS181

Height: 930–1630mm
Mic Arm Length:860mm
Book Plate Size: 505x290mm
Material: Steel
Weight: 2.09kg
Inner box: 130x100x980mm
Shipping Package:
320x280x1000mm (6pcs)









MS174

Height: 1150mm
Material: Steel
Load Capacity: 5kg
Weight: 2.72kg
Inner box: 110x100x1180mm
Shipping Package:
320x220x1200mm (6pcs)



New

Quick Release
Microphone Adapter



MS176

- Quickly change out a mic clip, boom, or any other type of mic stand
- Works with 5/8" UNS threads
- Red safety collar indicates when quick release not fully engaged
- Ergonomic, efficient, and easy to use
- Durable, contemporary,and compact design





MS176-1

MS176

Height: 89mm
Width: 25mm
Material: Steel
Weight: 0.2kg
Inner box: 35x35x105mm
Shipping Package:
195x195x230mm (50pcs)





MS108

Height:320mm
Width:370mm
Depth:250mm
Inner box: 370x210x340mm
Shipping Package:
650x390x710mm (6pcs)





MS177

Height:400mm
Width:500mm
Depth:292mm
Weight: 3.54kg



MS094

Height: 1461–2185mm
Arm Length: 1760mm
Cast Base: 538x514mm
Material: Steel
Must Hold: 1.2kg
Inner box: 595x150x1170mm
Shipping Package:
615x170x1200mm (1pcs)





MS117

Width: 191mm
Depth: 121mm
Height: 79mm
Material: Steel
Inner box: 130x20x205mm
Shipping Package:
410x220x225mm (30pcs)



MS131

Material:Steel
Inner box: 55x40x130mm
Shipping Package:
305x230x300mm (50pcs)



MS200FE

Upper Arm: 398mm
Lower Arm: 452mm
Inner box: 165x85x665mm
Shipping Package:
455x350x685mm (10pcs)



MS200AL

Upper Arm: 398mm
Lower Arm: 452mm
Inner box: 165x85x665mm
Shipping Package:
455x350x685mm (10pcs)



MS201

Upper Arm Length: 380mm
Lower Arm Length: 380mm
Material: Steel
Inner box: 120x45x395mm
Shipping Package:
500x255x415mm (20pcs)







MS202

Upper Arm Length: 540mm
Lower Arm Length: 460mm
Material: Steel
Inner box: 150x50x540mm
Shipping Package:
530x320x560mm (20pcs)





MS203

Upper Arm Length: 540mm
Lower Arm Length: 460mm
Material: Steel
Inner box: 150x70x540mm
Shipping Package:
620x380x560mm (20pcs)



MS030
Height: 160mm
Base Size:Φ130mm
Inner box: 155x30x180mm
Shipping Package:
340x200x330mm (20pcs)



MS031
Height: 160mm
Base Size:Φ130mm
Inner box: 155x30x180mm
Shipping Package:
340x200x330mm (20pcs)



MS032
Height: 315mm
Base Size:Φ130mm
Gooseneck: Φ15x300mm
Inner box: 155x30x180mm
Shipping Package:
340x200x330mm (20pcs)



MS033
Height: 315mm
Base Size:Φ130mm
Gooseneck: Φ15x300mm
Inner box: 155x30x180mm
Shipping Package:
340x200x330mm (20pcs)



MS034
Height: 140–190mm
Inner box: 90x50x230mm
Shipping Package:
540x480x250mm (50pcs)



MS035
Height: 140–190mm
Inner box: 55x55x195mm
Shipping Package:
305x305x420mm (50pcs)



MS036
F: 5/8"–27
M:3/8"–16
Inner box:
200x120x65mm(100pcs)
Shipping Package:
220x140x150mm (200pcs)



MS037
F: 5/8"–27
M:3/8"–16
Inner box:
200x120x65mm(100pcs)
Shipping Package:
220x140x150mm (200pcs)



MS038
F: 3/8"–16
M:5/8"–27
Inner box:
200x120x65mm(100pcs)
Shipping Package:
220x140x150mm (200pcs)



MS039
F: 3/8"–16
M:1/2"
Inner box:
200x120x65mm(100pcs)
Shipping Package:
220x140x150mm (200pcs)



MS040
F:1/2"
M:3/8"–16
Inner box:
200x120x65mm(100pcs)
Shipping Package:
220x140x150mm (200pcs)



MS301
1/4"Female to 3/8"Male



MS302
3/8" Female to 1/4" Male



MS303
1/4"Female to 3/8"Female



MS041
F: 5/8"–27
I.D:Φ22–30
Shipping Package:
32x15x22cm (50pcs)



MS042
F: 5/8"–27
I.D:Φ22–25
Shipping Package:
320x150x220mm (50pcs)



MS043
F: 5/8"–27
I.D:Φ24–28
Shipping Package:
320x150x220mm (50pcs)



MS044
F: 5/8"–27
I.D:Φ27–30
Shipping Package:
320x150x220mm (50pcs)



MS044P
F: 5/8"–27 / 3/8"–16
I.D:Φ27–30
Plastic thread
Shipping Package:
320x150x220mm (50pcs)



MS045
F: 5/8"–27
I.D:Φ21
Shipping Package:
320x150x220mm (50pcs)



MS046
F: 5/8"–27
I.D:Φ31
Shipping Package:
320x150x220mm (50pcs)



MS047
F: 5/8–27"
I.D:Φ21
Shipping Package:
320x150x220mm (50pcs)



MS048
Shipping Package:
600x390x400mm (50pcs)



MS049
Shipping Package:
600x390x400mm (50pcs)



MS051
Inner box: 180x40x350mm
Shipping Package:
570x440x370mm (30pcs)



MS095
Inner box: 35x35x130mm
Shipping Package:
280x195x195mm (50pcs)





MS077
O.D: Φ46~48mm
Inner box: 100x90x130mm
Shipping Package:
480x320x300mm (30pcs)





MS078
O.D: Φ22~24mm
Inner box: 100x90x130mm
Shipping Package:
480x320x300mm (30pcs)

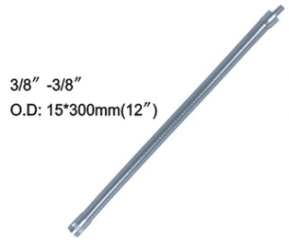

MS052
Inner box: 20x20x310mm
Shipping Package:
230x230x330mm (100pcs)

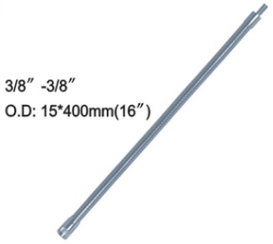

MS053
Inner box: 20x20x410mm
Shipping Package:
230x230x430mm (100pcs)

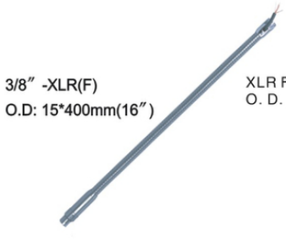

MS054
Inner box: 25x25x435mm
Shipping Package:
280x280x455mm (100pcs)



MS055
Inner box: 25x25x510mm
Shipping Package:
280x280x530mm (100pcs)



MS056
Inner box: 25x25x435mm
Shipping Package:
280x280x455mm (100pcs)



MS057
Inner box: 20x20x410mm
Shipping Package:
230x230x430mm (100pcs)



MS058
Inner box: 25x25x335mm
Shipping Package:
280x280x355mm (100pcs)

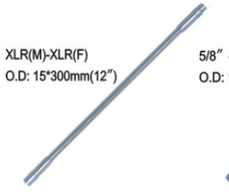

MS059
Inner box: 25x25x335mm
Shipping Package:
280x280x355mm (100pcs)



MS060
Inner box: 20x20x410mm
Shipping Package:
230x230x430mm (100pcs)



MS061
Arm Length: 580–910mm
Materials: Steel
Inner box: 90x60x590mm
Shipping Package:
200x200x610mm (6pcs)

MS062
Arm Length: 580–910mm
Materials: Steel
Inner box: 90x60x590mm
Shipping Package:
200x200x610mm (6pcs)

MS063
Arm Length: 750mm
Materials: Steel
Inner box: 90x60x750mm
Shipping Package:
200x200x770mm (6pcs)

MS064
Arm Length: 750mm
Materials: Steel
Inner box: 90x60x750mm
Shipping Package:
200x200x770mm (6pcs)

MS073
Arm Length: 750mm
Materials: Steel
Inner box: 130x70x760mm
Shipping Package:
280x230x780mm (6pcs)

MS065
Inner box: 60x45x375mm
Shipping Package:
490x330x395mm (50pcs)

MS066
Inner box: 60x45x525mm
Shipping Package:
490x330x545mm (50pcs)

MS067
Inner box: 60x45x425mm
Shipping Package:
490x330x445mm (50pcs)

MS068
Inner box: 65x30x190mm
Shipping Package:
350x210x330mm (50pcs)